Schulthess Spirit industrial washing machines

INNOVATION wmi 100, wmi 130, wmi 160

Characteristics and Strengths

- Industrial washing machines for gentle and economical textile care
- Freely programmable microprocessor control
- 72 ProfiClean programmes for textile-friendly and customer-specific laundry care
- 12 Wet-Clean programmes for effective laundry protection and modern textile care
- 10 Disinfection programmes with ThermoplusControl, temperature control for high process reliability
- 76 free programme positions for individual customer demands and laundry care
- autoClean programme with display of machine cleaning interval
- Finely perforated stainless steel drum (up to 15 525 holes) for efficient washing and rinsing processes with maximum laundry protection
- High spin performance for minimum residual moisture up to 46 %
- Economical wash programmes and low operating costs
- Large loading opening and metal door with softClose door lock
- Machine plinth with and without fluff trap drawer
- Front, sides and machine cover of robust chrome nickel steel
- Self-cleaning detergent compartment of corrosion-proof chrome nickel steel (V4A) with 5 dosing cups for washing powder and liquid detergent
- Maintenance-free drum seal and robust sealed-for-life bearing
- Frequency-controlled low-wear asynchronous motor
- Swiss-made and conceived for over 30 000 wash programmes

Display

- Easy machine operation with pushbuttons with pictograms
- Two-line graphic display for programme time and progress
- Language selection button for 17 languages
- Start delay with calendar function
- ½ button with adapted process and detergent dosing technology
- USB interface for programme and software update

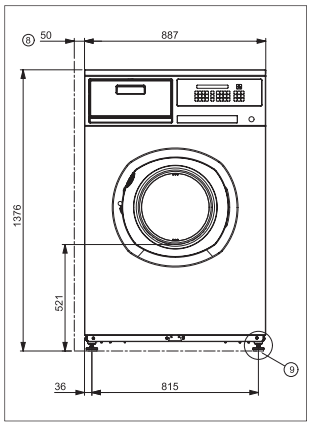

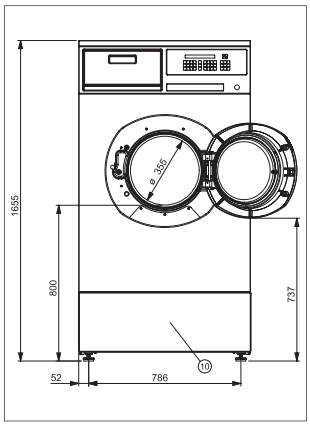

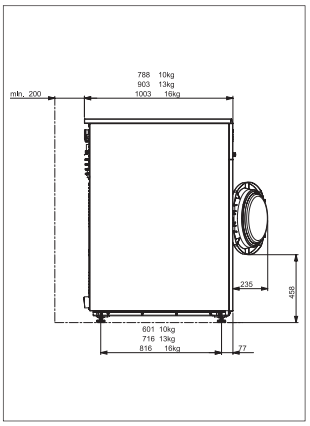

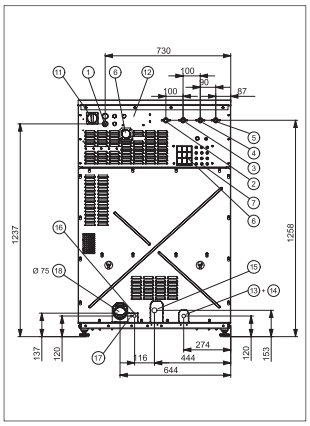

Dimensions	wmi 100	wmi 130	wmi 160
Width	887 mm	887 mm	887 mm
Depth	788 mm	903 mm	1003 mm
Height	1376 mm	1376 mm	1376 mm

1 Electrical connection
2 Hot water or cold water connection hard
3–5 Cold water hard or soft
6 Overflow/De-aerating
7 Connection for liquid detergent
8 Minimum dimension
9 Adjustable feet
10 Plinth (option/three versions)
11 Main switch
12 Power plate
13 Steam indirect, feed
14 Steam direct, return
15 Steam direct
16 For steam heating: Control air (standard) Control water (option)
17 Control water, return
18 Drain tube

Swissmade

www.schulthess.ch

SCHULTHESS
Experts in laundry care

Spirit industrial washing machines

Company or brand name		Schulthess	Schulthess	Schulthess
Type of appliance		**Washing machine**	**Washing machine**	**Washing machine**
Type of sales description		**Spirit industrial wmi 100**	**Spirit industrial wmi 130**	**Spirit industrial wmi 160**
Product no.		9676.1	9677.1	9678.1
Washing machine				
Filling amount / dry washing 1:10	max. kg	10	13	16
Drum volume	l	100	130	160
Infinitely variable speed	rpm	30 – 1150	30 – 1100	30 – 1050
g force	g	458	419	382
Residual moisture [1]	%	46	48	50
Programme duration cold water connection [2]	min	55	55	55
Programme duration hot water connection 70°C [2]	min	48	48	48
Consumption data				
Energy consumption				
– cold water connection [2]	kWh	1,8	2,3	2,8
– hot water connection 70°C [2]	kWh	1.4	1.6	1.8
Water consumption [2]	l	85	106	128
Electrical Installation				
Voltage	V	400 3 N~ / 50 Hz	400 3 N~ / 50 Hz	400 3 N~ / 50 Hz
Connected rating	kW	11,8	14,9	18
Electric heating	kW	11,4	14,5	17,6
Motor	kW	1,1	1,1	1,1
Reduced connected rating electrical heating [3]	kW	7,6	7,6	8,8
Fuse rating	AT	20 (16 [3])	25 (16 [3])	32 (16 [3])
Voltage for steam heating	V	230 1N~ / 50 Hz	230 1N~ / 50 Hz	230 1N~ / 50 Hz
Fuse rating for steam heating	AT	16	16	16
Heating Installation (steam)				
Connected ratings	kg/h	18 – 21	23 – 26	27 – 31
Connection	Zoll	3/4	3/4	3/4
Pressure (overpressure)	min. bar	0,6	0,6	0,6
	max. bar	13	13	13
Steam consumption per load [2]	kg	3,5	4,5	5,5
Plumbing Installation				
Water pressure: by the customer	MPa	0,3 – 1 (3 – 10 bar)	0,3 – 1 (3 – 10 bar)	0,3 – 1 (3 – 10 bar)
Cold water inlet, hard 3/4"	l/min	15 – 31	15 – 31	15 – 31
Cold water inlet, soft, from softener 3/4"	l/min	15 – 31 [4]	15 – 31 [4]	15 – 31 [4]
Hot water inlet from central water boiler max. 70° C 3/4"	l/min	15 – 31	15 – 31	15 – 31
Drain line (outer)	Ø mm	75	75	75
Drain throughput (drain valve)	max. l/min	260	260	260
Details for shipping/planning purposes				
Width of machine	mm	887	887	887
Depth of machine	mm	788	903	1003
Height of machine	mm	1376	1376	1376
– including base (option)	mm	1655	1655	1655
Filling height	mm	521	521	521
– including base (option)	mm	800	800	800
Filling opening	mm	355	355	355
Weight of machine	kg	334	348	364
Operating weight (incl. water + laundry)	kg	389	420	452
Soil bearing (static)	kg/m^2	691	633	603
Shipping weight	kg	366	388	406
Packed cubage	m^3	0,95	1,16	1,16
Options				
		– Direct steam heating		
		– Indirect steam heating		
		– Combination electric/direct steam heating		
		– Machine plinth in chrome steel for 800 mm filling height		
		– Machine plinth with integrated lint trap drawer (wmi 130 / wmi 160)		
		– Water recovery		
		– Connection for up to 14 liquid detergent dosing pumps		
Safety and service				
Complies with Swiss safety regulations		yes	yes	yes
Complies with the European Machinery Directive		2006 / 42 / EG	2006 / 42 / EG	2006 / 42 / EG

Guarantee	1 year
Service provided by	Schulthess Maschinen AG
Manufacturer's name and address	Schulthess Maschinen AG, CH-8633 Wolfhausen/ZH
Country of origin	Switzerland

Explications:
1) Cotton fabrics (175 g/m2) following ISO 9398-4
2) 60° C wash cycle
3) Variant: reduced heating output with hot water connection min. 55° C. This can produce a prolongation of the programme.
4) 2 inlets to connect

Schulthess Maschinen AG
Landstrasse 37, CH-8633 Wolfhausen ZH
Phone 0844 880 880, www.schulthess.ch

SCHULTHESS
Experts in laundry care

Note: State of the table details as january 2016, subject to further developments.